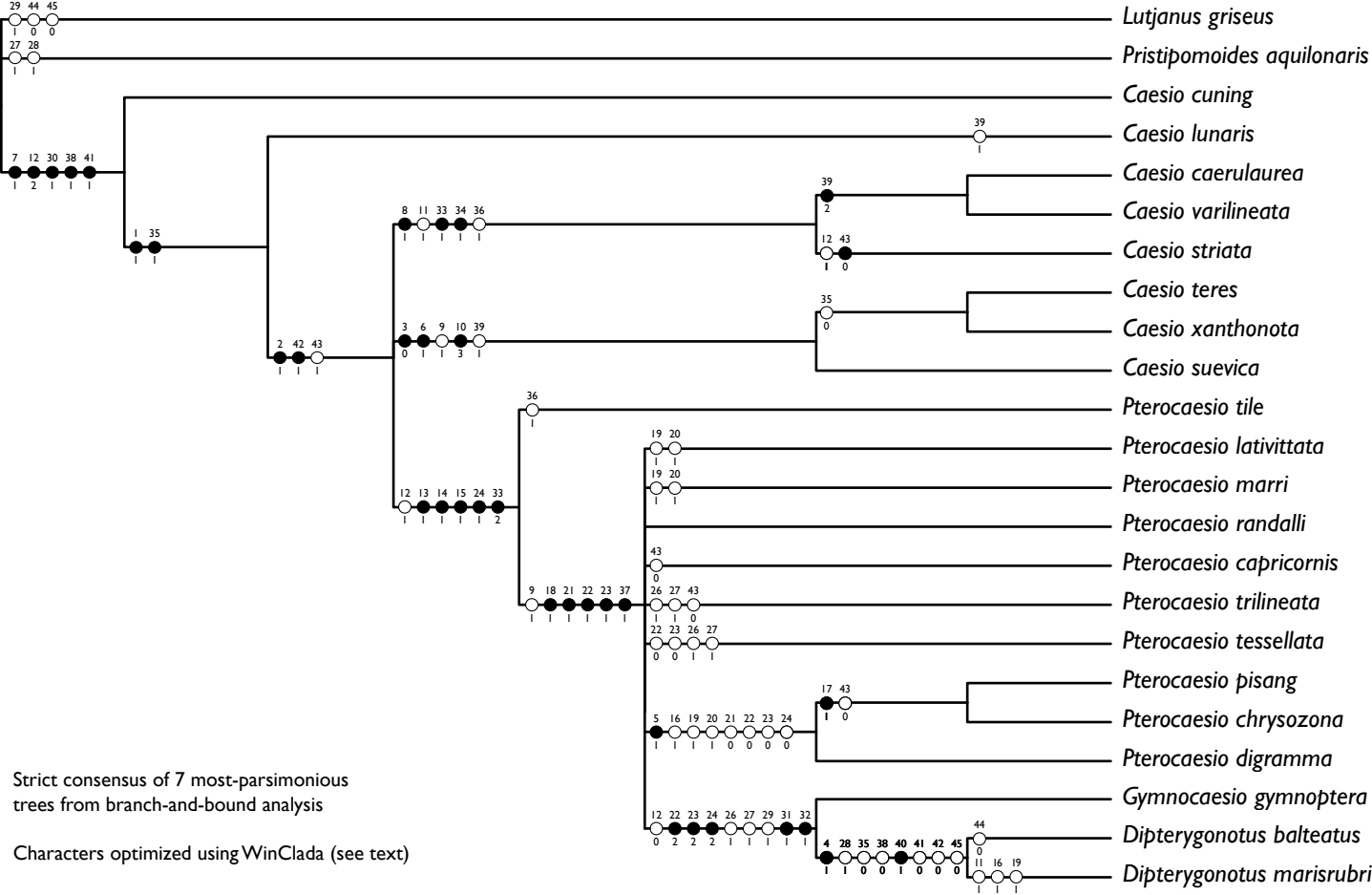

Strict consensus of 7 most-parsimonious trees from branch-and-bound analysis

Characters optimized using WinClada (see text)